6. Exploded Views and Parts List

6-1 Main Exploded View

6-2 Main Parts List

6-3 Cover Exploded View

6-4 Cover Parts List

6-5 Frame Exploded View

6-6 Frame Parts List

6-7 Fuser Exploded View

6-8 Fuser Parts List

6-9 Drive Assembly Exploded View

6-10 Drive Parts List

6-11 Pick-Up Exploded View

6-12 Pick-Up Parts List

6-13 Cassette Exploded View

6-14 Cassette Parts List

6-15 Second Cassette Exploded View (Option)

6-16 Second Cassette Parts List (Option)

6-17 Second Cassette Frame Exploded View (Option)

6-18 Second Cassette Frame Parts List (Option)

6-1 Main Exploded View

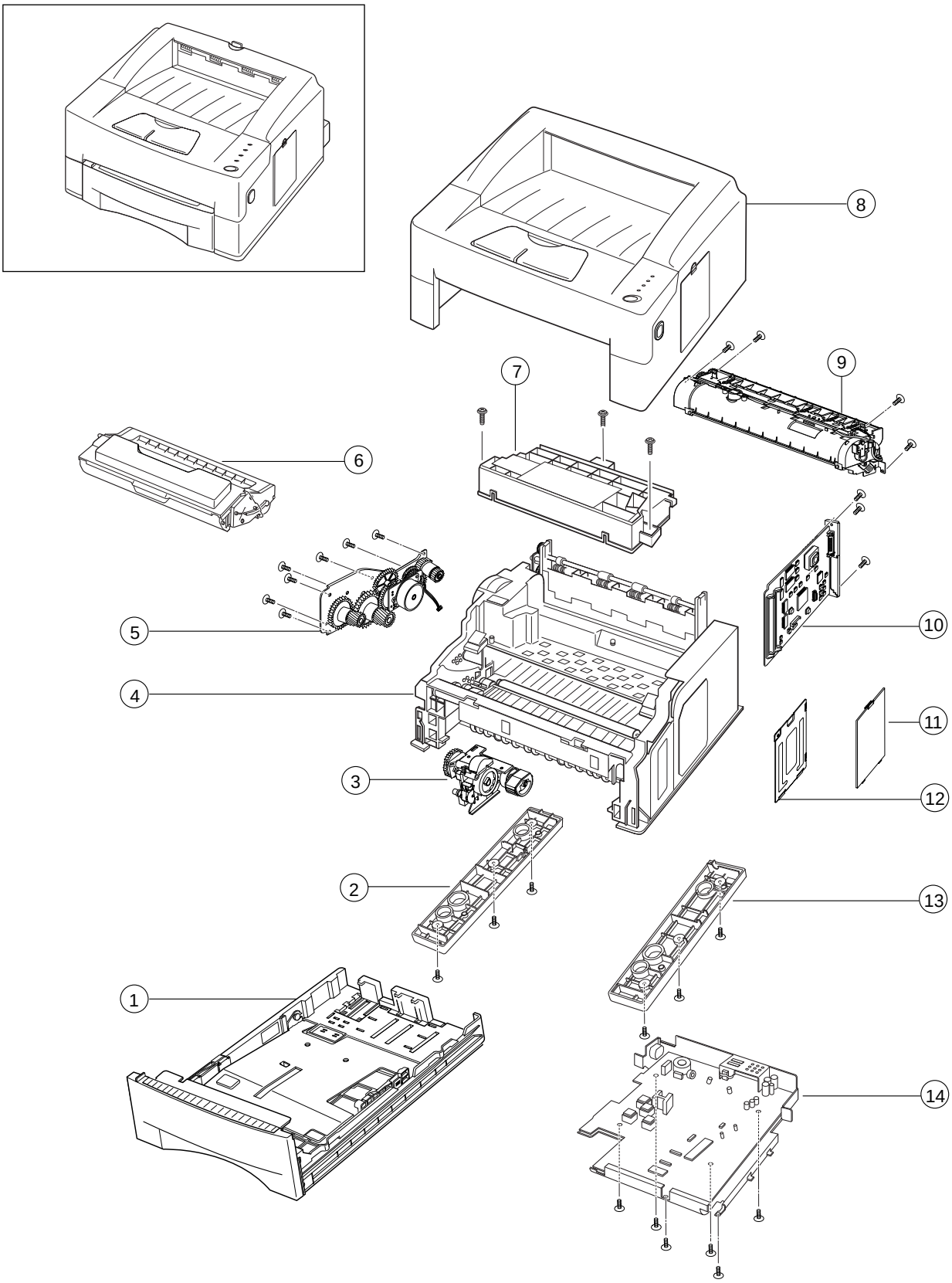

6-2 Main Parts List

NO	DESCRIPTION	SEC. CODE	Q'TY	A/S
1	MEA RACK-FEEDER CAS	JC97-01077A	1	O
2	MEC-BRKT, BASE R	JC75-10922A	1	O
3	MEA RACK-FEEDER.	JC97-01078A	1	O
4	ELA HOU-FRAME(12)	JC96-01092A	1	X
5	ELA HOU-MOTOR MAIN	JC96-01099A	1	O
6	ELA-DEVE UNIT	ML+6000D5	1	X
7	UNIT-LSU	JC59-10507A	1	O
8	ELA HOU-CVR_MAIN	JC96-01305A	1	O
9	ELA HOU-FUSER_220,KR	JC96-01280A	1	O
10	ELA HOU-CONTROLLER_K	JC96-01308A	1	O
11	PRO-COVER_SIMM	JC72-41224A	1	O
12	IPR-SHIELD SIMM	JC70-10234A	1	O
13	MEC-BRKT, BASE	JC75-10920B	1	O
14	ELA HOU-ENG B'D(220)	JC96-01228A	1	O (220V)
	ELA HOU-ENG B'D(110)	JC96-01236A	1	O (110V)

Note
- 110V : for QwikLaser 6000
- 220V : for ML-6000

6-3 Cover Exploded View

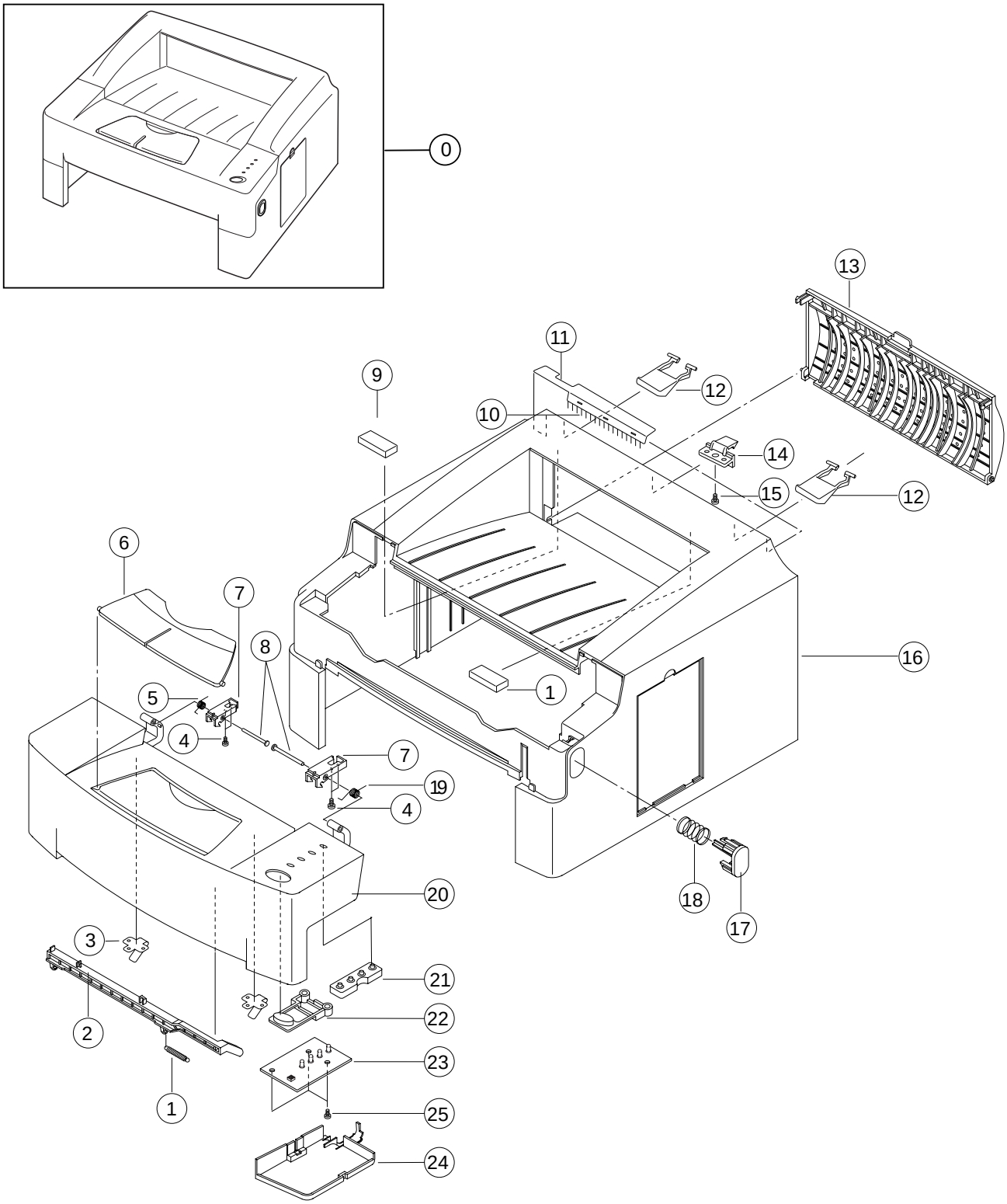

6-4 Cover Parts List

NO	DESCRIPTION	SEC. CODE	Q'TY	A/S
0	ELA HOU-CVR_MAIN	JC96-01305A	1	O
1	SPRING-HOOK LEVER	6107-000133	1	X
2	LEVER-HOOK	JC72-40325A	1	X
3	PLATE-SPRING, DEV	JC70-10223A	2	X
4	SCREW-TAPTITE	6003-000002	4	X
5	SPRING-COVER OPEN, L	JC61-70944A	1	X
6	STACKER-SUB	JC72-41220A	1	X
7	HINGE-HSG, R	JC72-41216A	2	X
8	SHAFT-COVER OPEN	JC70-10228A	2	X
9	PAD-DUMMY	JC73-30912A	2	X
10	BRUSH-ANTI	JC74-40902A	1	X
11	GROUND-ANTI	JC70-11057A	1	X
12	GUIDE-DUMMY	JC72-41111A	2	X
13	COVER-EXIT	JC72-41221A	1	X
14	LOCKER-EXIT	JC72-41286A	1	X
15	SCREW-TAPTITE	6003-000196A	1	X
16	COVER-MAIN	JC72-41214A	1	X
17	BUTTON-C/O	JC72-40336A	1	X
18	SPRING-CS (BUTTON)	6107-000117	1	X
19	SPRING-COVER OPEN, R	JC61-70945A	1	X
20	COVER-FRONT, LED	JC72-41215A	1	X (220V)
	COVER-FRONT, XAR	JC72-41215B	1	X (110V)
21	WINDOW-LED	JC72-41397A	1	X
22	BUTTON-PANEL, LED	JC72-41219A	1	X
23	PBA-PANEL, LED	JC92-00346A	1	O
24	CAP-PANEL WIRE	JC72-41222A	1	X
25	SCREW-TAPTITE	6003-000002	3	X

Note
- 110V : for QwikLaser 6000
- 220V : for ML-6000

6-5 Frame Exploded View

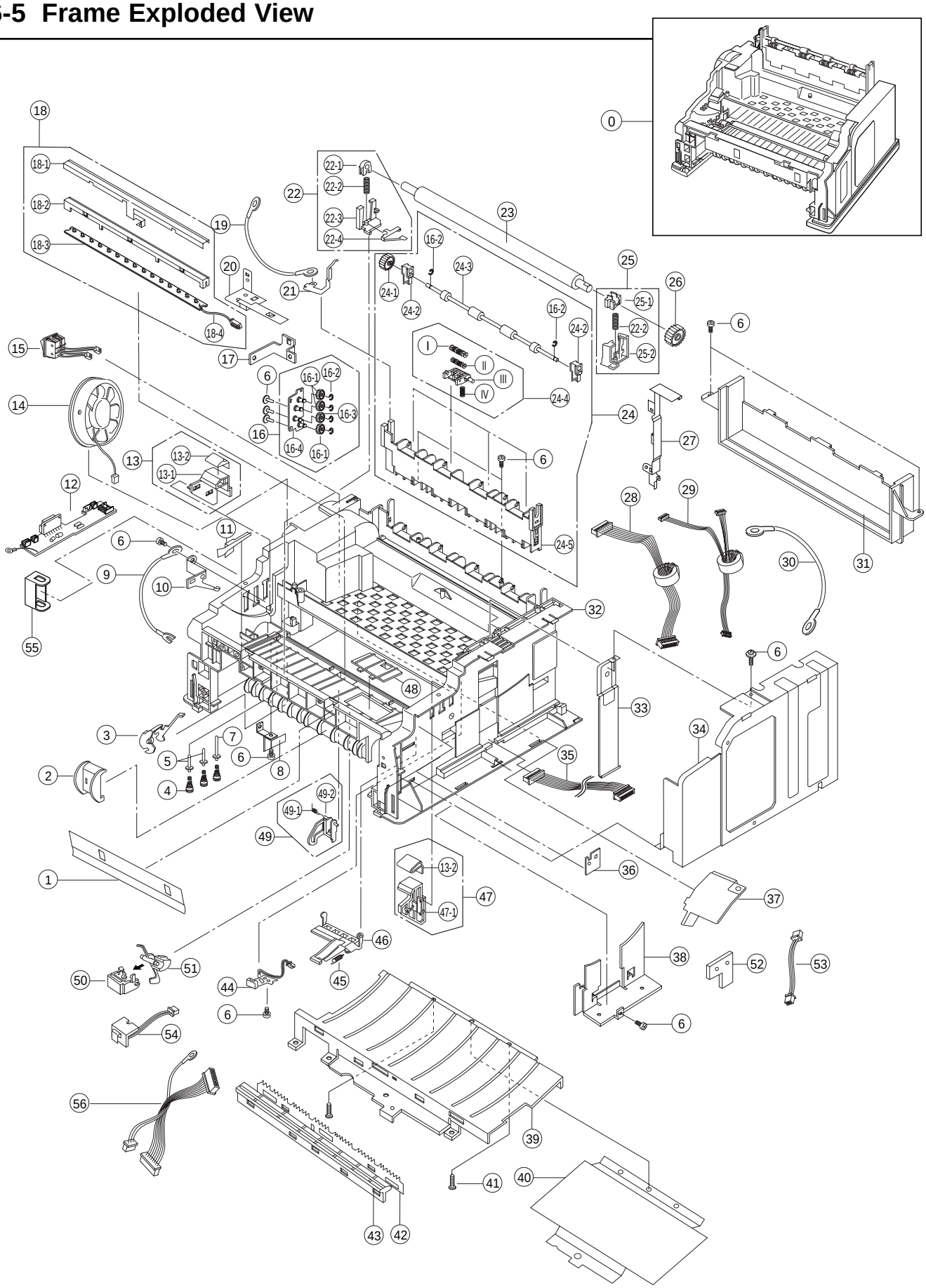

6-6 Frame Parts List

NO	DESCRIPTION	SEC. CODE	Q'TY	A/S
0	ELA HOU-FRAME (12)	JC96-01092A	1	X
1	SHEET COVER OPC	JC72-40909A	1	X
2	GUIDE-SKEW(12)	JC72-41350A	1	X
3	ACTUATOR-FEED	JC72-40226A	1	X
4	SPRING-CS	6107-000104	3	X
5	CONNECTOR TERMINAL2	3712-000165	2	X
6	SCREW-TAPTITE 3*10	6003-000002	6	X
7	CONNECTOR TERMINAL1	3712-000166	1	X
8	GROUND-PLT MOTOR	JC70-10013A	1	X
9	CBF HARNESS	JC39-40576A	1	X
10	GROUND-OPC	JC70-10217A	1	X
11	GUIDE-DUST	JC70-11068A	1	X
12	MOTOR BOARD	JC41-10543A	1	X
13	ELA-DEVELOPER, GUID	JC96-00290A	1	O
13-1	GUIDE-DEV L	JC72-40274A	1	X
13-2	SPRING-PS G/DEV	JC61-70001A	2	X
14	FAN DC 24V	3103-001049	1	X
15	SWITCH	JC39-40510A	1	X
16	MEA RACK-BRKT_EXIT	JC97-01198A	1	O
16-1	GEAR-EXIT/U ID	JC66-40006A	4	X
16-2	RING-C ID3	6044-000159	2	X
16-3	GEAR-EXIT, L/ID	JC66-40210A	1	X
16-4	BRACKET_EXIT	JC70-11075A	1	X
17	EARTH PLATE FUSER	JC70-10911A	1	X
18	ELA HOU-PTL	JC96-01148A	1	O
18-1	EARTH TRNAS (12)	JC70-11023A	1	X
18-2	HOLDER-PTL	JC72-41187A	1	X
18-3	PBA MAIN PTL	JC92-01050A	1	X
18-4	CBF HARNESS	JC39-40512A	1	X
19	CBF HARNESS	JC39-40546A	1	X
20	GND PLATE G/TR	JC70-10980A	1	X
21	GROUND-EXIT	JC70-11058A	1	X
22	MEA RACK-TR HOLDER, L	JC97-01079A	1	O
22-1	BUSHING-TR12 (L)	JC72-41283A	1	X
22-2	SPRING-TR (12)	JC61-70940A	2	X
22-3	HOLDER-TR L (12)	JC72-41285A	1	X
22-4	SPRING-PLATE (12)	JC70-11050A	1	X
23	ROLLER-TRANSFER	JC75-10962A	1	O
24	HEA RACK-BRKT_EXT	JC97-01198A	1	O
24-1	GEAR-EXIT	JC66-40209A	1	X
24-2	BEARING-EXIT	JC75-10529A	2	X
24-3	ROLL EXIT FR/UP	JC75-10957A	1	X
24-4	MEA RACK-EXIT ROLLER	JC97-01098A	1	X
I	ROLLER EXIT MAIN	JC72-41081A	4	X
II	ROLLER EXIT FR	JC72-41082A	4	X
III	HOLDER-EXIT	JC72-41080A	4	X
IV	SPRING-EXIT (12)	JC61-70939A	4	X
24-5	HOUSING-EXIT (250)	JC72-41114A	1	X
25	MEA RACK-TR HOLDER, R	JC97-01071A	1	O
25-1	BUSHING-TR12 (R)	JC72-41060A	1	X
25-2	HOLDER-TR R (12)	JC72-41062A	1	X
26	GEAR-TRANSFER (12)	JC66-40949A	1	O
27	GROUND FUSER(R)	JC70-11064A	1	X
28	CBF HARNESS	JC39-40003A	1	X
29	LSU-HARNESS	JC39-40540A	1	X
30	CBF-HARNESS	JG39-40179A	1	X
31	GUIDE-FUSER	JC72-40233A	1	X
32	BASE FRAME	JC72-41113A	1	O
33	SHIELD CAP WIRE	JC70-10003A	1	X
34	SHIELD ICU	JC70-10225A	1	X
35	CBF HARNESS	JC39-40009A	1	X
36	FILM-EMI	JC74-10908A	1	X
37	DAMPER-PLATE	JC72-41288A	1	X
38	GROUND-ICU	JC70-10006A	1	X
39	GUIDE-TRANSFER	JC70-10220A	1	X
40	SHEET GUIDE-TR	JC74-10907A	1	X
41	SCREW-TAPTITE 3*8	6003-000119	2	X
42	PLATE-SAW	JC70-10232A	1	X
43	HOLDER-SAW PLATE	JC72-40247A	1	X
44	ELA HOU-THERMISTOR	JC96-01148A	1	X
45	SPRING-CVR OPEN (12)	JC61-70964A	1	X
46	ACTUATOR-C/O	JC72-40269A	1	X
47	ELA-DEVELOPER, GUID	JC96-00291A	1	O
47-1	GUIDE-DEV R	JC72-40275A	1	X
48	ROM COVER	JC72-41186A	1	X
49	MEA RACK-EMPTY_ACT	JC97-01207A	1	O
49-1	SPRING-EMPTY	JC61-70965A	1	X
49-2	ACTUATOR-EMPTY12	JC72-41290A	1	X
50	ACTUATOR-TR	JC72-41287A	1	O
51	HOLDER-ACTUATOR	JC72-41289A	1	O
52	PBA MAIN-CLN	JC92-01084A	1	O
53	CBF-HARNESS	JC39-40513A	1	X
54	ELA-HOU CLEANING PLT	JC96-01229A	1	X
55	CAP-GND WIRE	JC72-00011A	1	X
56	CBF-HARNESS MOTOR	JC39-40575A	1	X

6-7 Fuser Exploded View

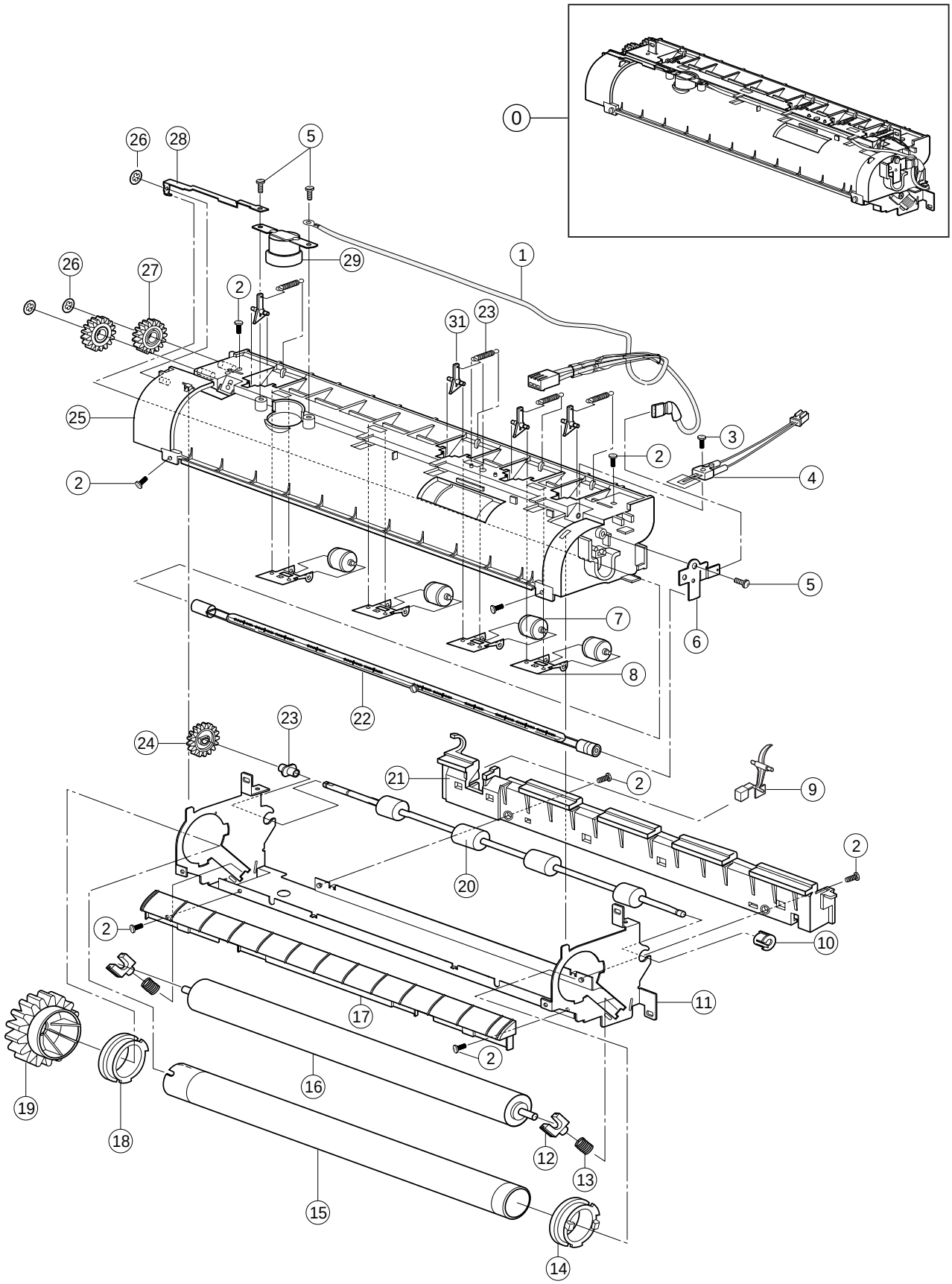

6-8 Fuser Parts List

NO	DESCRIPTION	SEC. CODE	Q'TY	A/S
0	ELA HOU-FUSER(110V)	JC96-01093A	1	O (110V)
	ELA HOU-FUSER(220V)	JC96-01094A	1	O (220V)
1	CBF-HARNESS-FU(110)	JC39-40609A	1	X
	CBF-HARNESS-FU(220)	JC39-40610A	1	X
2	SCREW-MACHINE M3x6, BH+	6001-000131	8	X
3	SCREW-TAPTITE M3x12, FH+	6003-000198	1	X
4	THERMISTOR-NTC	1404-001117	1	O
5	SCREW-TAPTITE M3x8, BH+	6003-000119	3	X
6	NPR-ELECTRODE FU R	JC71-10201A	1	X
7	PMO-ROLLER EXIT F/UP	JC72-40342A	3	X
8	SPRING-PS, EXIT F/UP	JC61-70006A	3	X
9	PMO-ACTUATOR EXIT	JC72-41079A	1	O
10	BEARING-EXIT FU	JC66-10201A	1	X
11	IPR-FUSER LOWER	JC70-10983A	1	X
12	PMO-BUSHING PR	JC72-41078A	2	X
13	SPRING-PR	JC61-70923A	2	X
14	PMO-BUSHING HR, R	JC72-41077A	1	X
15	NEX-ROLLER HEAT	JC71-20901A	1	O
16	MEC-ROLLER PRESSURE	JC75-10956A	1	O
17	PMO-GUIDE PATH	JC72-41074A	1	X
18	PMO-BUSHING HR, L	JC72-41076A	1	X
19	GEAR-FUSER	JC66-40926A	1	O
20	MEC-ROLLER EXIT, FU/LR	JC75-10955A	1	X
21	PMO-FUSER REAR	JC72-41075A	1	X
22	LAMP-HALOGEN	4713-001075	1	O (220V)
	LAMP-HALOGEN	4713-001076	1	O (110V)
23	BEARING-EXIT FU L	JC66-10200A	1	X
24	GEAR-EXIT	JC66-40209A	1	X
25	PMO-FUSER UPPER	JC72-41073A	1	X
26	RING-CS	6044-000001	3	X
27	GEAR-EXIT, L/ID	JC66-40210A	2	X
28	NPR-ELECTRODE FUSER	JC71-10902A	1	X
29	THERMOSTAT	4712-000001	1	O
30	PMO-CLAW SEPARATOR	JC72-41064A	4	X
31	SPRING-CLAW	JC61-70922A	4	X

Note
- 110V : for QwikLaser 6000
- 220V : for ML-6000

6-9 Drive Assembly Exploded View

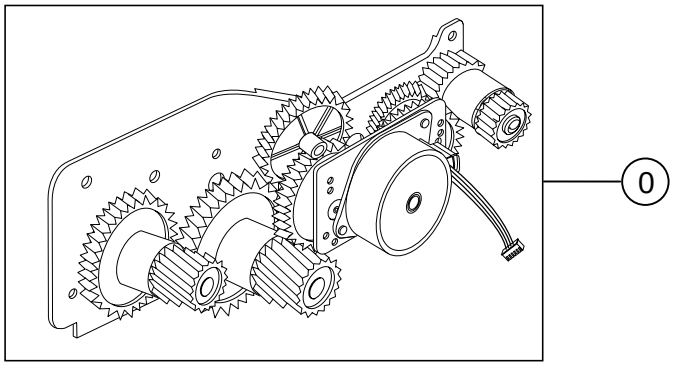

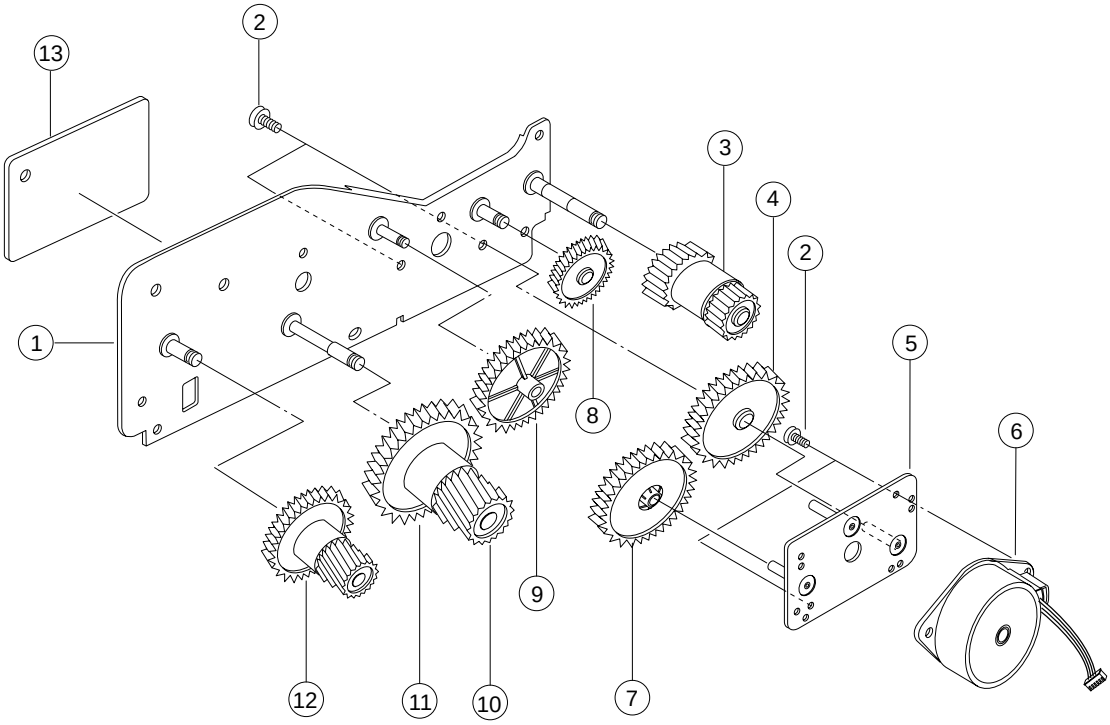

6-10 Motor Bracket Parts List

NO	DESCRIPTION	SEC. CODE	Q'TY	A/S
0	ELA HOU-MOTOR MAIN	JC96-01099A	1	O
1	IPR-BRKT_GEAR	JC70-10984A	1	X
2	SCREW-MACHINE M3x6	6001-000131	5	X
3	GEAR-FUSER DRIVE	JC66-40378A	1	X
4	GEAR-125/18	JC66-40376A	1	X
5	IPR-BRKT, MOTOR	JC70-10985A	1	X
6	MOTOR-STEP	3101-001144	1	O
7	GEAR-132/50 (12)	JC66-40959A	1	X
8	GEAR-IDLE, FU	JC66-40377A	1	X
9	GEAR-IDLE OPC (12)	JC66-40960A	1	X
10	GEAR-OPC DRV2	JC66-40010A	1	X
11	GEAR-OPC DRIVE (12)	JC66-40961A	1	X
12	GEAR-FEED DRV (12)	JC66-40962A	1	X
13	FILM-BRACKET	JC73-00002A	1	X

6-11 Pick-Up Exploded View

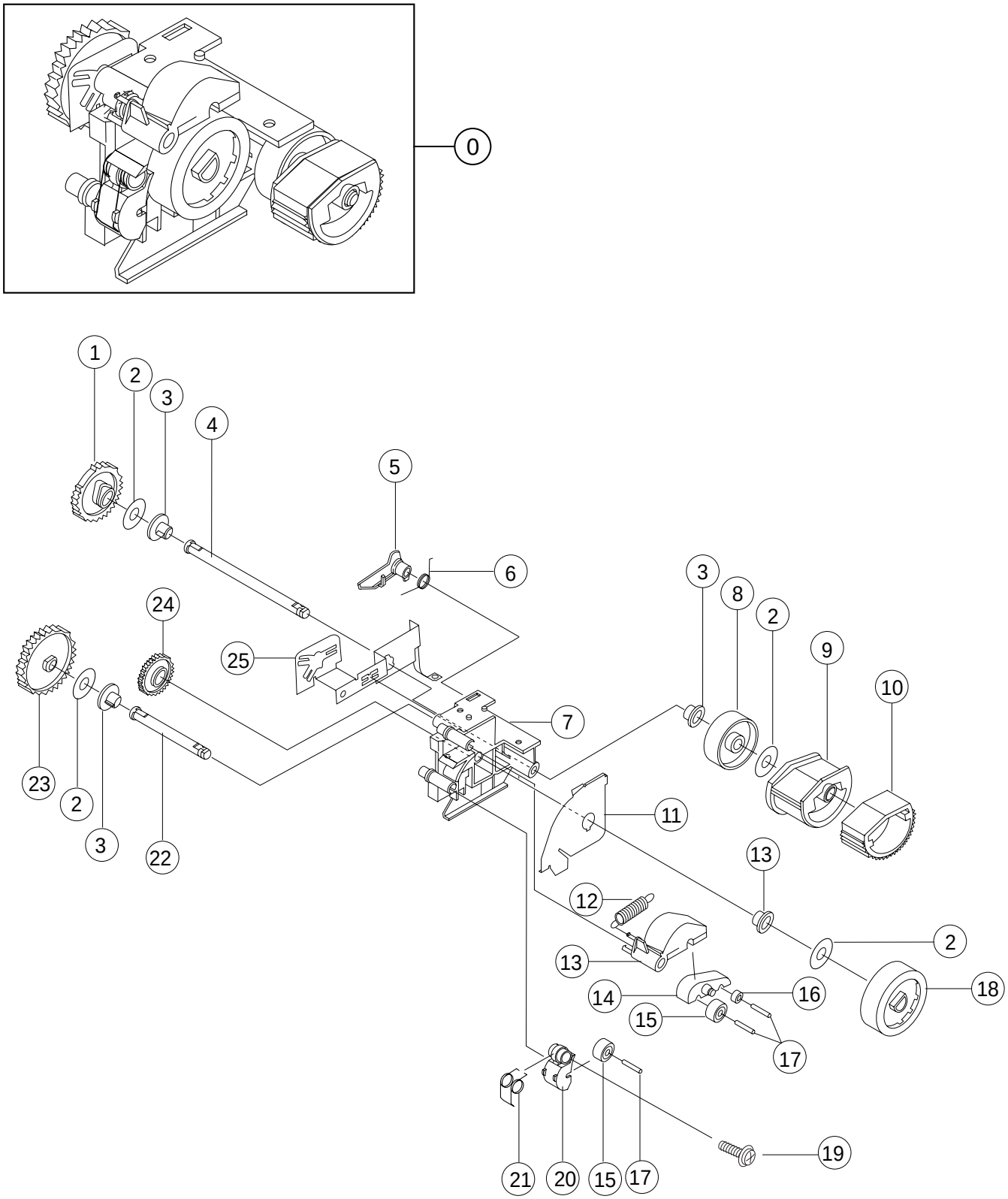

6-12 Pick-Up Parts List

NO	DESCRIPTION	SEC. CODE	Q'TY	A/S
0	MEA RACK-FEEDER	JC97-01078A	1	O
1	PLT, GEAR-PICK UP	JC66-40219A	1	X
2	WASHER-PLAIN	6031-000021	4	X
3	PLT, BEARING-PICK UP	JC66-10202A	4	X
4	IMP, SHAFT-PICK UP	JC70-10231A	1	X
5	PLT, LEVER-PICK UP	JC72-40254A	1	X
6	SPRING PICK-UP	JC61-70966A	1	X
7	PLT, FRAME-FEED	JG72-41115A	1	X
8	PMP, IDLE-PICKUP	JC72-41234A	1	X
9	PLT, HOUSING-PICK UP	JC72-40252A	1	X
10	PLT, RUBBER-PICKUP	JC73-40907A	1	X
11	IMP, GUIDE-FEED	JC70-10992A	1	X
12	SPRING-FEED (2)	JC61-70942A	1	X
13	PLT, HOLDER-FEED2	JC72-41185A	1	X
14	PLT, SUB HOLER-FEED, SMALL	JC72-40266A	1	X
15	PLT, ROLLER-FEED, LARGE	JC72-40261A	2	X
16	PLT, ROLLER-FEED, SMALL	JC72-40262A	1	X
17	IMP, SHAFT-FEED, IDLER	JC70-10230A	3	X
18	PLT, ROLLER-FEED, DRIVE	JC72-41295A	1	X
19	SCREW (M3X6 FH+, BLK)		1	X
20	PLT, HOLDER-FEED1	JC72-41184A	1	X
21	SPRING-FEED (1)	JC61-70941A	1	X
22	IMP, SHAFT-FEED	JC70-10229A	1	X
23	PLT, GEAR-FEED	JC66-40375A	1	X
24	PLT, GEAR-P/UP DRIVE	JC66-40219A	1	X
25	IMP, GND-FEED	JC70-10991A	1	X

6-13 Cassette Exploded View

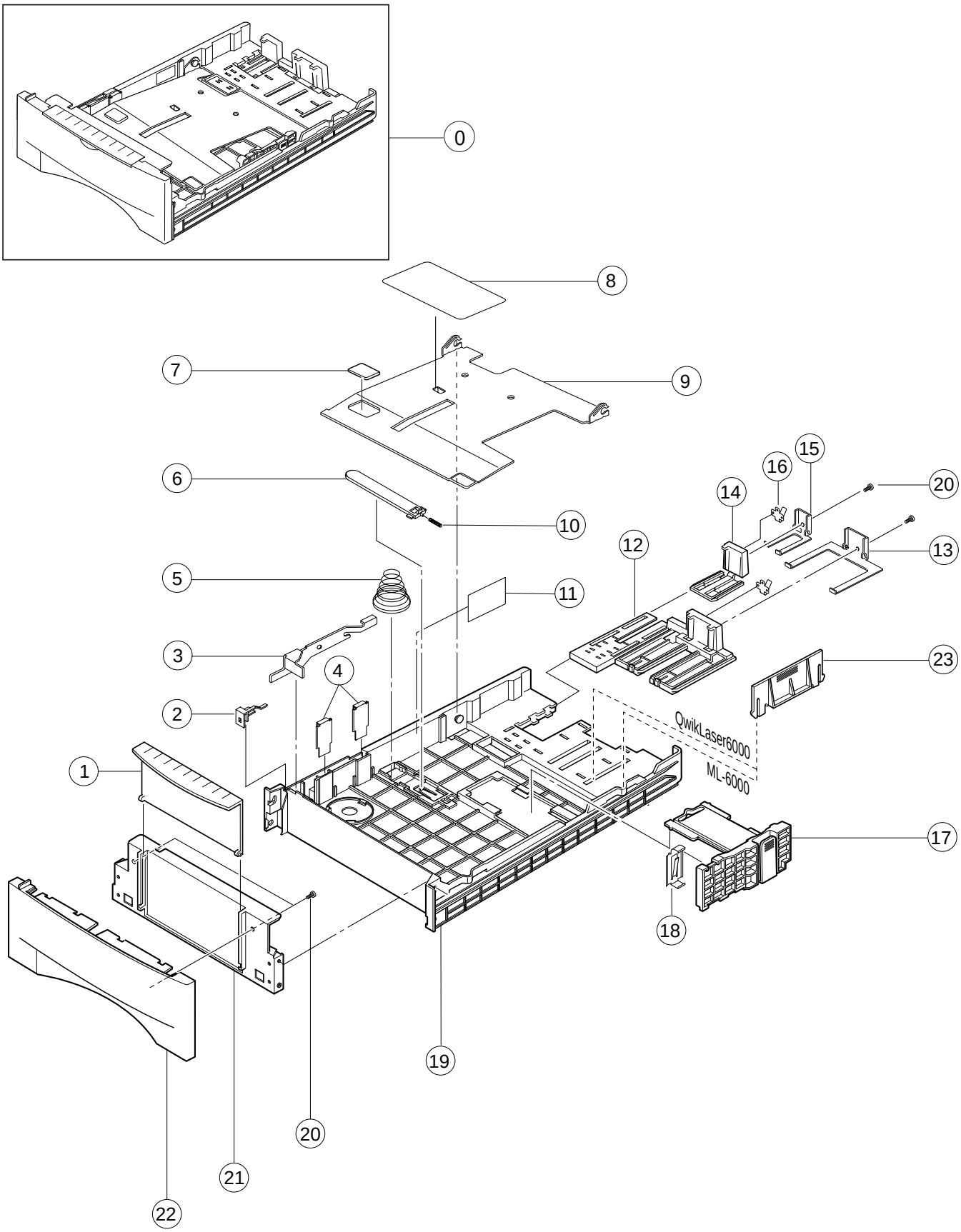

6-14 Cassette Parts List

NO	DESCRIPTION	SEC. CODE	Q'TY	A/S
0	MEA RACK-FEEDER CAS	JC97-01077A	1	O
1	PMO-TRAY-MANUAL	JC72-41387A	1	X
2	PMO-HOLDER FINGER	JC72-41182A	1	X
3	IMP, FINGER	JC70-10213A	1	X
4	IMP, GUIDE PLATE-PAPER	JC70-10219A	2	X
5	SPRING-KNOCK UP	JC61-70951A	1	X
6	LOCKER-PLATE	JG72-40844A	1	X
7	MMP, PAD	JC73-10911A	1	X
8	LABEL-PLATE	JC68-30929A	1	X
9	IPR-PLT KNOCK UP(12)	JC70-11022A	1	X
10	SPRING-LOCKERPLATE	JG61-70531A	1	X
11	LABEL-HEIGHT	JG68-30572A	1	X
12	PMO-GUIDE LEGAL	JC72-41393A	1	X
13	IPR-BRACKET_LEGAL	JC70-11086A	1	X
14	PMO-GUIAE_LETTER	JC72-41392A	1	X
15	IPR-BRACKET_LETTER	JC70-11087A	1	X
16	IPR-TENSION_LETTER	JC70-11085A	2	X
17	PMO-ADJUSTER_S CAST	JC72-41394A	1	X
18	IPR-GUIDE-PLATE	JC70-10993A	1	X
19	PMO-FRAME_CASSETTE, P	JC72-41382A	1	X
20	SCREW-TAPTITE M3x10 FH, WHITE	6003-000002	4	X
21	GUIDE-CASSETTE, M	JC72-00013A	1	X
22	PMO-GUIDE SUB CAST.	JC72-41225A	1	X
23	PMO-GUIDE REAR	JC72-41180A	1	X

6-15 Second Cassette Frame Exploded View

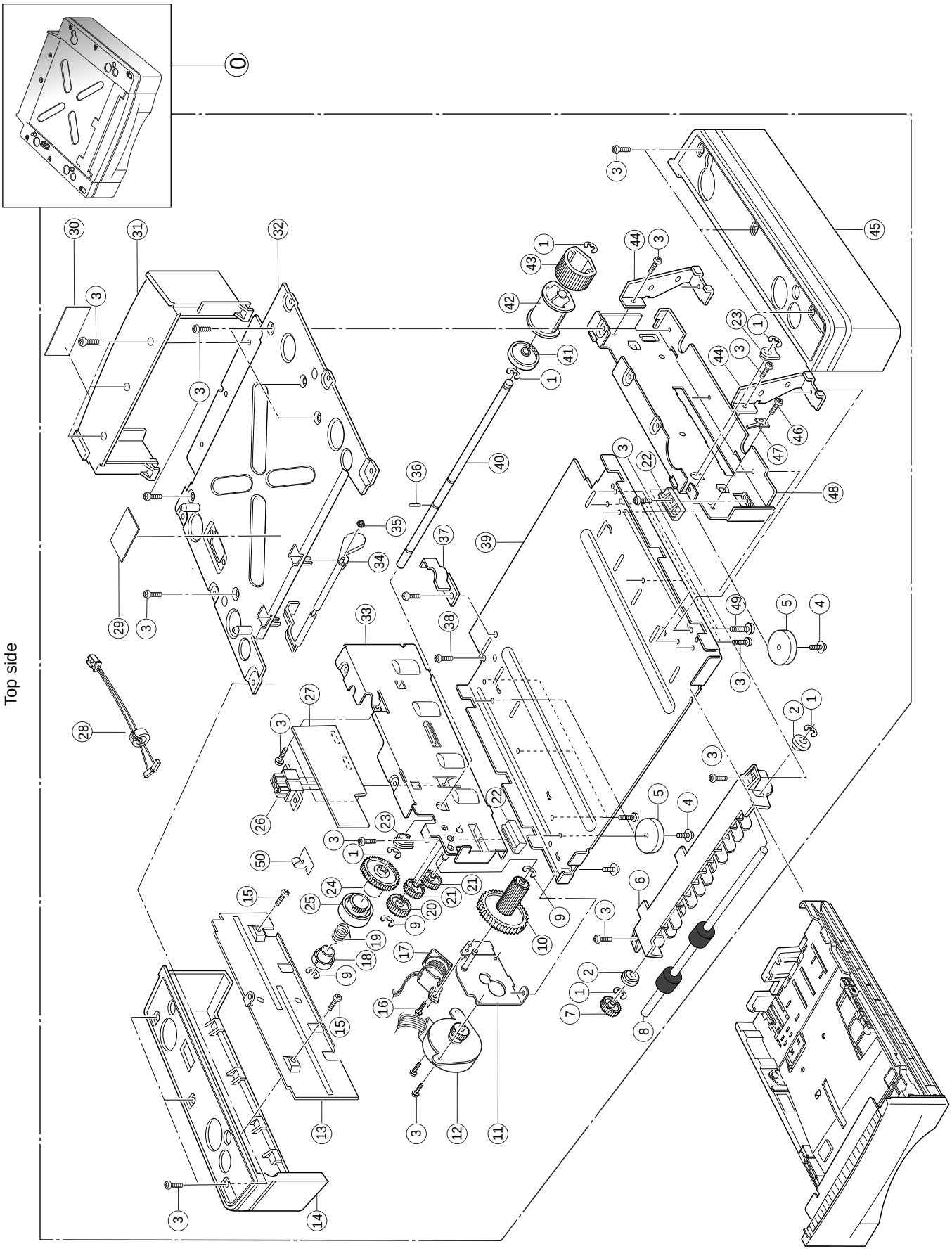

6-16 Second Cassette Frame Parts List

NO	DESCRIPTION	SEC. CODE	Q'TY	A/S
0	ELA HOU-SCF(ML6000)	JC96-01268A	1	X
1	E-RING	6044-000126	4	X
2	BEARING ROLLER IDLER	JC66-10304A	2	X
3	TAPTITE SCREW	6003-000179	23	X
4	TAPTITE SCREW		4	X
5	FOOT RUBBER	JC61-40301A	4	X
6	GUIDE INNER UPPER	JC72-40307B	1	X
7	GEAR-FEED	JC66-40014A	1	X
8	ROLLER-INNER UPPER	JC75-10028A	1	X
9	E-RING	6044-000125	5	X
10	GEAR DOUBLE OPTION	JC66-40363A	1	X
11	BRKT MOTOR (SCF)	JC70-10986A	1	X
12	STEP MOTOR	3101-001158	1	X
13	SHIELD-PCB	JC70-10451A	1	X
14	COVER-LEFT	JC72-40368B	1	X
15	TAPTITE SCREW	6002-000194	9	X
16	MACHINE SCREW	6001-000131	4	X
17	SOLENOID-MAGNET	JC33-10001A	1	X
18	HUB CLUTCH	JC72-40587A	1	X
19	SPRING-TS,CLUTCH	JC61-70331A	1	X
20	GEAR IDLER OPTION	JC66-40365A	1	X
21	GEAR IDLE Z19	JC66-40012A	2	X
22	GUIDE RAIL	JC72-40371A	2	X
23	BEARING-FEED	JC72-40531A	2	X
24	GEAR P/UP OPTION	JC66-40364A	1	X
25	COLLAR CLUTCH P1	JC72-40569B	1	X
26	CBF HARNESS	JC39-40544A	1	X
27	PBA MAIN	JC92-01077A	1	X
28	CBF HARNESS	JC39-40305A	1	X
29	LABEL WARNING	JC68-20417A	1	X
30	LABEL(R)-SCF(12)	JC68-30936A	1	X
31	COVER-REAR	JC72-40362B	1	X
32	FRAME UPPER	JC70-10027A	1	X
33	FRAME LEFT(SCF)	JC70-10023A	1	X
34	ACTUATOR-ARM	JC72-40370A	1	X
35	CS STOP RING	6044-000001	1	X
36	PIN PARELLED,P/U	JC70-40360A		X
37	STOPPER-SCF	JC72-41347A	1	X
38	MACHINE SCREW	6001-001532	2	X
39	FRAME LOWER	JC70-11065A	1	X
40	SHAFT PICKUP	JC70-40002A	1	X
41	IDLE-SCF	JC72-41348A	1	X
42	HODER-HOUSING	JC72-40654A	1	X
43	RUBBER P/UP	JC73-40907A	1	X
44	BRKT SUPPORT	JC70-10461A	2	X
45	COVER-RIGHT	JC72-40367B	1	X
46	TAPTITE SCREW		1	X
47	GROUND ROLLER	JC70-10467A	1	X
48	FRAME RIGHT(SCF)	JC70-10022A	1	X
49	MACHINE SCREW	6001-000153	2	X
50	CABLE CLAMP	6502-000003	1	X

6-17 Second Cassette Exploded View

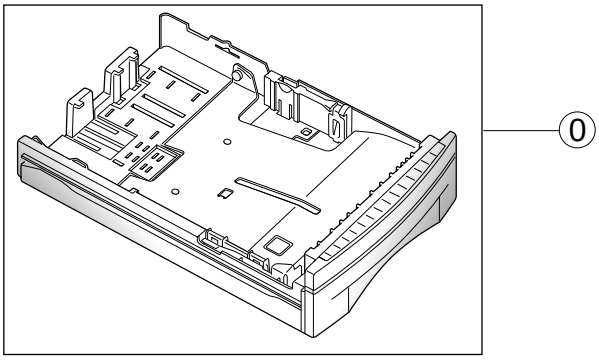

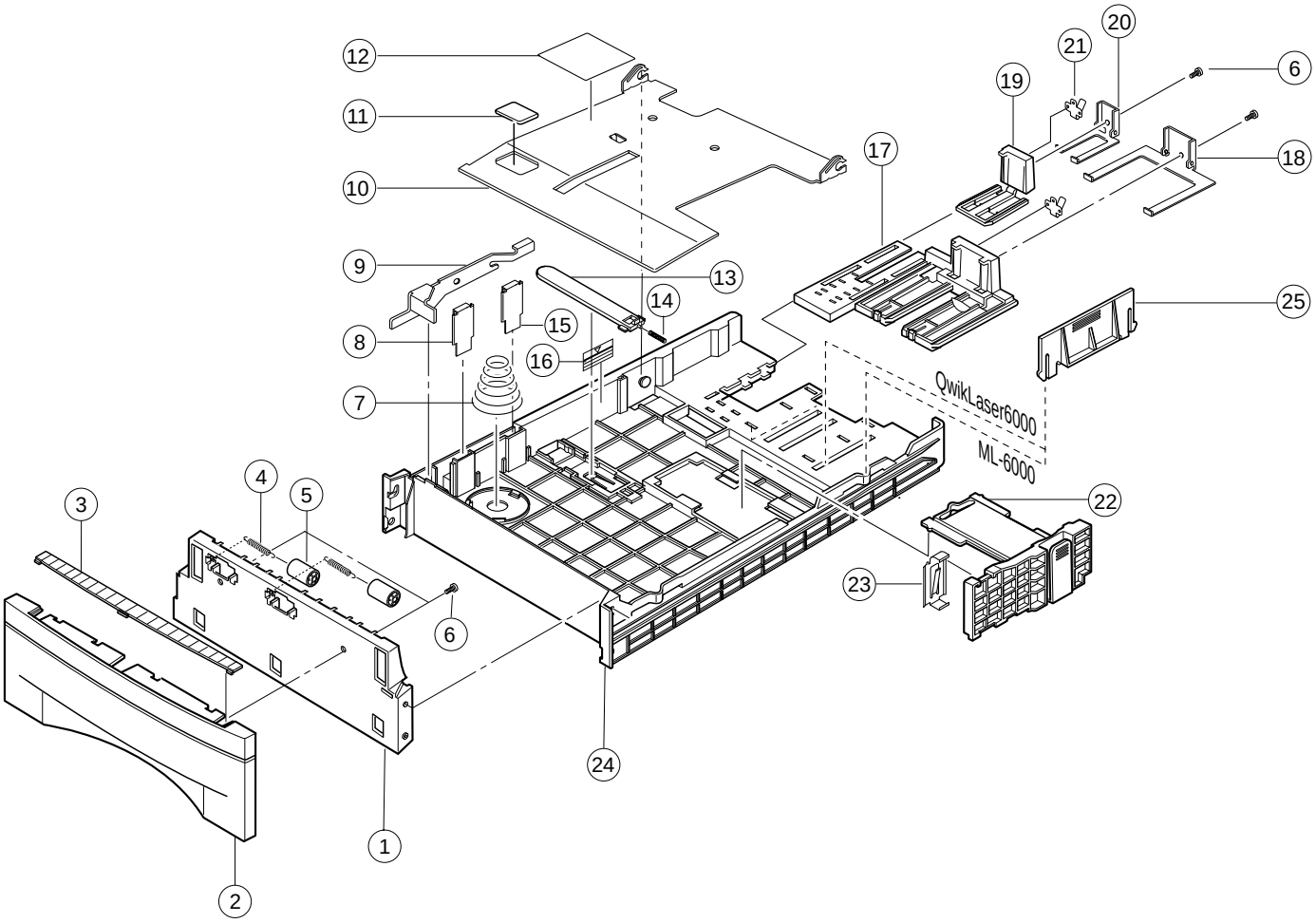

6-18 Second Cassette Parts List

NO	DESCRIPTION	SEC. CODE	Q'TY	A/S
0	MEA RACK-CAST.SCF	JC97-01196A	1	X
1	GUIDE CST	JC72-40306A	1	X
2	PMO-GUIDE-2'ND CAST.	JC72-41227A	1	X
3	PLATE-COLOR	JC72-41226A	1	X
4	SPRING ES	6107-001047A	2	X
5	ROLLER EXIT	JC72-40361A	2	X
6	TAPTITE SCREW	6003-000196	2	X
7	SPRING KNOCKUP	JC61-70951A	1	X
8	GUIDE SCF	JC70-11076A	1	X
9	FINGER	JC70-10213A	1	X
10	PLT KNOCK-UP (12)	JC70-11022A	1	X
11	MMP, PAD	JC73-10911A	1	X
12	LABEL(R) PLATE	JC68-30929A	1	X
13	LOCKER-PLATE	JC72-41210A	1	X
14	SPRING-LOCKER PLATE	JG61-70531A	1	X
15	GUIDE PAPER	JC70-10219A	1	X
16	LABEL(R) HEIGHT	JG68-30572A	1	X
17	GUIDE-LEGAL	JC72-41180A	1	X
18	IPR-BRACKET_LEGAL	JC70-11086A	1	X
19	PMO-GUIDE_LETTER	JC72-41392A	1	X
20	IPR-BRACKET_LETTER	JC70-11087A	1	X
21	IPR-TENSION_LETTER	JC70-11085A	2	X
22	GUIDE-SIDE CASSETTE	JC72-41116A	1	X
23	GUIDE PLATE	JC70-10993A	1	X
24	FRAME-CASSETTE	JC72-41183A	1	X
25	PMO-GUIDE REAR	JC72-41180A	1	X

Memo